AERO TURN CNC LATHE

2 Axis CNC Lathe

RT-280P · 280PL
45° Slabt Bed
Linear Guide Way · Hyd / Servo

BT-300 · 380 · 420
BT-300L · 380L · 420L
BT-300XL · 380XL · 420XL
30° Slabt Bed
Box Way · Hyd / Servo

Turning Center

MT-280P · 280PL
45° Slabt Bed
Linear Guide Way · Power Turret · Cs Axis

MT-300 · 380
MT-300L · 380L
MT-300XL · 380XL
30° Slabt Bed
Box Way · Power Turret · Cs Axis

Turning center (Y axis)

MTY-300L · 380L
MTY-300XL · 380XL
30°+30° Slabt Bed
Box Way · Power Turret · Cs Axis · Y Axis

Twin Spindle CNC Lathe

BTS-300L · 380L
BTS-300XL · 380XL
30° Slabt Bed
Box Way · Twin Spindle · Hyd / Servo

Twin Spindle Turning Center

MTS-300L · 380L
MTS-300XL · 380XL
30° Slabt Bed
Box Way · Twin Spindle · Power Turret · Cs Axis

MSY-300L · 380L
MSY-300XL · 380XL
30°+30° Slabt Bed
Box Way · Twin Spindle · Power Turret · Cs Axis · Y Axis

MTS-300L · XL
MTS-380L · XL
BTS-300L · 380L
BTS-300XL · 380XL

BT-300 · 380 · 300L · 380L
MT-300 · 380 · 300L · 380L

BT-300XL · 380XL
MT-300XL · 380XL
MTY-300XL · 380XL
MTS-300L · 380L
MSY-300XL · 380XL

MTY-300L · 380L
MSY-300L · 380L

RT-280P · 280PL
MT-280P · 280PL

RT / MT - 280P / PL SERIES

- Linear way CNC Lathe
- Linear way Turning center

45°Slabt Bed | Linear Guide Way | Hyd / Servo (RT) | Power Turret (MT) | VDI Tool Holder (MT) | Cs Axis (MT) | MANUAL GUIDE i (MT)

MAIN SPECIFICATION:

			RT-280P/PL	MT-280P/PL
Max. Swing Over Bed		mm	570	
Max. Turning Diameter		mm	350	250
Max. Turning Length		mm	500 / 750	
Chuck Size		inch	8"	
Bar Through Diameter		mm	52	
Z/X Axis Rapid Traverse		M/min	30 / 30	
Turning Tool Size		mm	□25 / □20	
Boring Tool Size		mm	Ø 32	Ø 40 / Ø 32
Turret	Type		Hydraulic / Servo (Opt.)	Servo
	No. of Tools		10 / 12(Opt.)	10

Outstanding Features :

RT-280P / 280PL

- One-piece structure design. (45°)
  High rigidity, consistent performance under heavy loading.
- Rigid linear guideways. Rapid feed reaches 30 M/min.
  Great efficiency with accuracy.
- Flexible chip conveyor arrangement.
  Chip conveyor may load from either left or right side,
  loading from back side is also available upon request.
- Power Turret or Servo Turret is also available as optional items.

MT-280P / 280PL

- VDI30/40 power (servo) turret available as options.
  A superior solution for multi tasks.

Applicable industries:

航太產業 | 醫療產業 | 汽車工業 | 機踏車產業 | 住宅設備產業 | 電子產業

RT SERIES - MAIN CONSTRUCTION

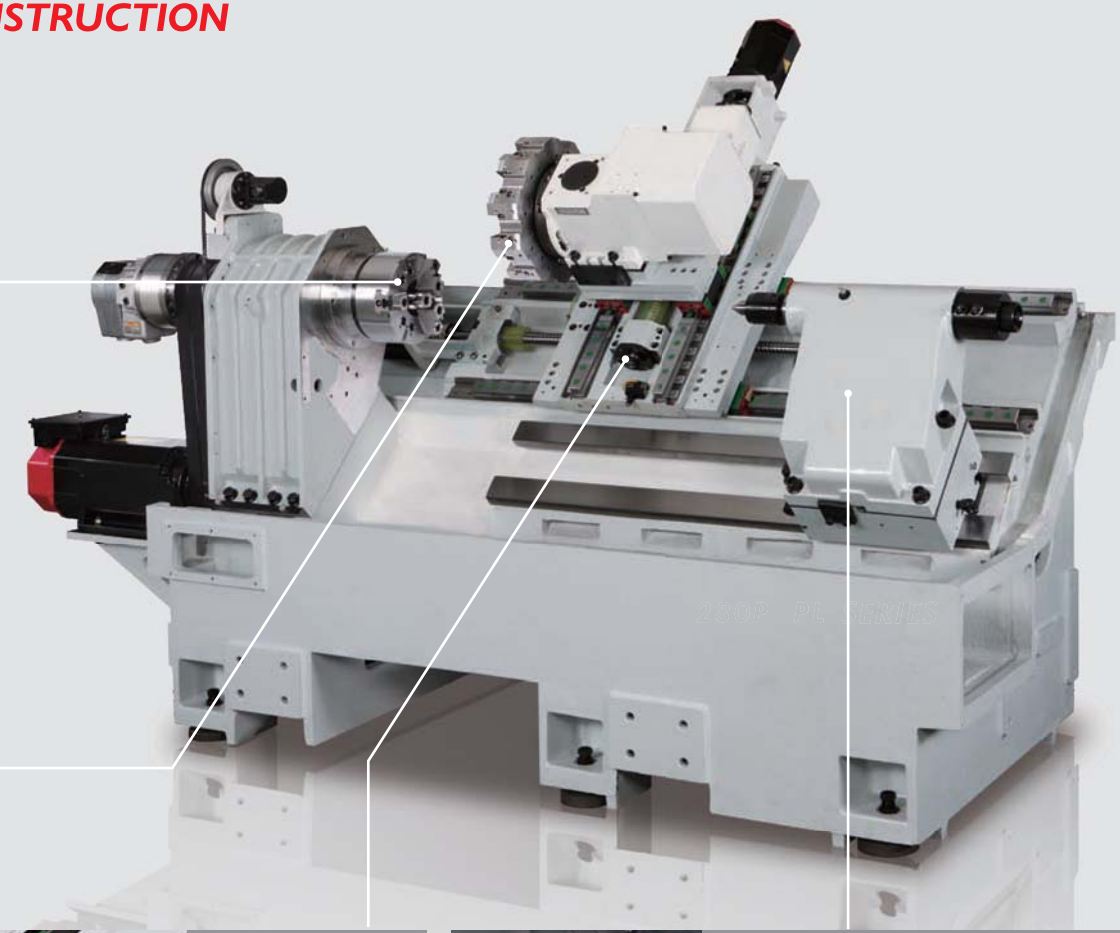

Rigid Spindle Design

- Fin type headstock.
  Excellent heat dispersion.
  Minimum thermal deformation.
- Angular ball type bearings.
  High precision bearings in wide-span design.

Axial Type Power Turret
MT-280P/PL(opt.)

- SAUTER brand from Germany.
- 12 station turret with Cs axis, combined computer program for tooling function and servo driven, powered tools for milling, boring, drilling and tapping.

High-speed Servo Turret Indexing System (Opt.)

- Tool-to Tool rotating time 0.3 second.
- Total Indexing time (180°) 0.9 second.
- Reliable under heavy cutting.

Cs axis system
MT-280P/PL(opt.)

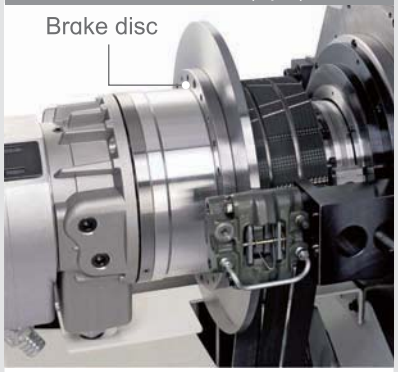

- Adopt high accurate encoder sensor and hydraulic disc brake system to reach high precisely positioning.

Heavy Duty Linear Guideway

- Equipped roller type linear guideway, rapid travel on X/Z axes.
- High speed,
  High accuracy,
  High efficiency.

Powerful Tailstock

- Tailstock with MT4 live center ruggedly constructed for maximum rigidity.
- Movement controlled by saddle, improving the efficiency.
- Hydraulic system equipped to support long workpiece.
- The hydraulic system secures the turning accuracy.

TOOLING INTERFERENCE DIAGRAM

UNIT：mm

10 Tools Turret

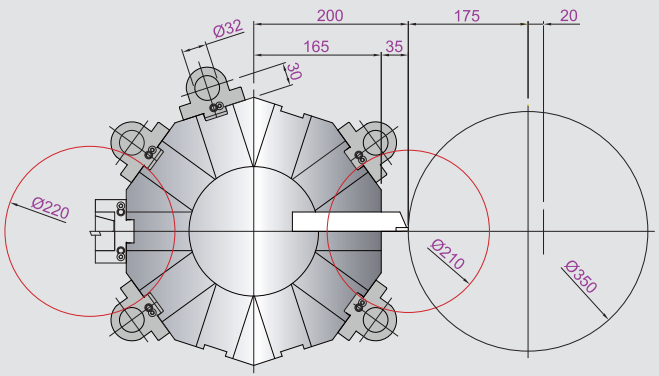

12 Tools Turret

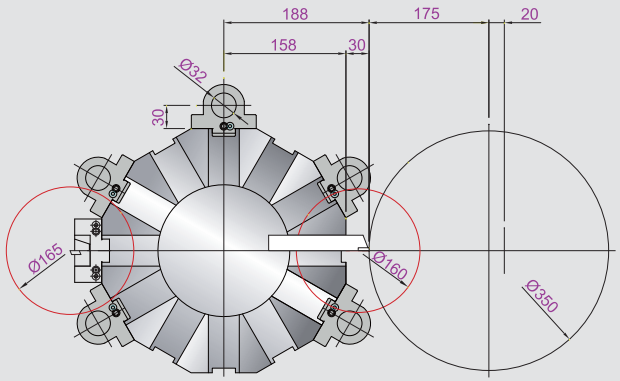

TOOL TRAVEL

UNIT：mm

10/12 Tools

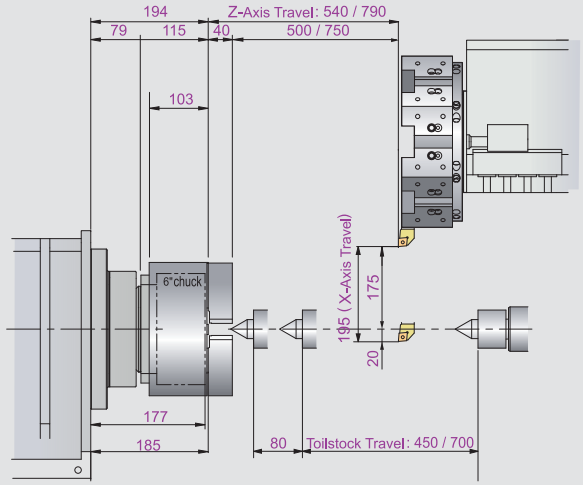

TOOLING SYSTEM

UNIT：mm

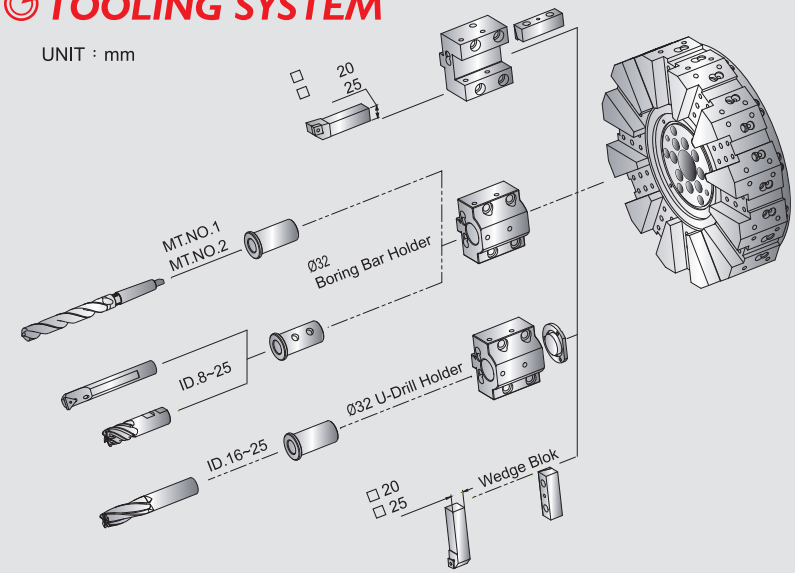

SPINDLE POWER DIAGRAM:

Main Spindle Motor

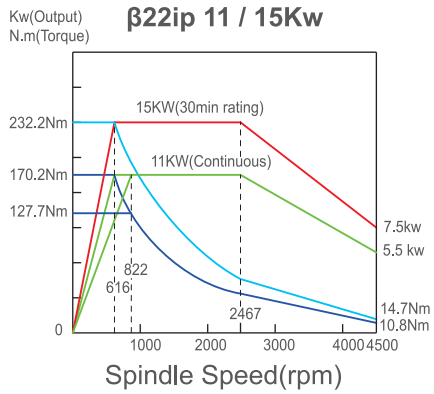

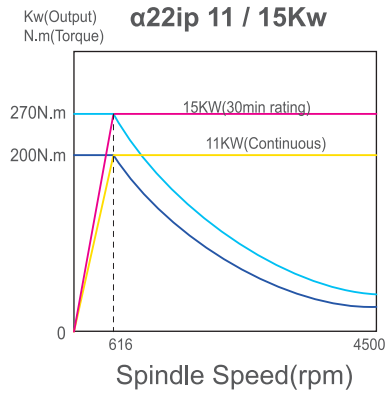

TOOLING INTERFERENCE DIAGRAM 12 Tools Power Turret-Radial Type

Unit：mm

VDI 30 LS160SP

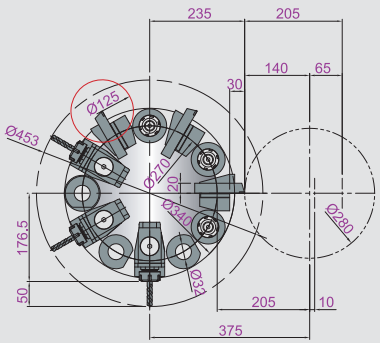

VDI 40 LS200SP

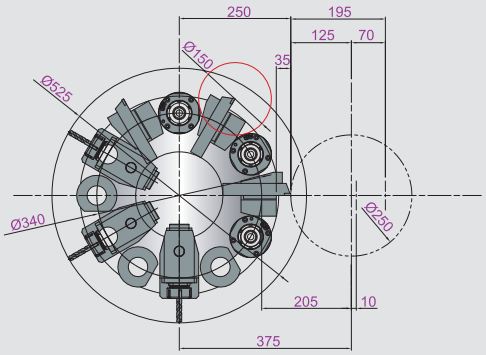

VDI 30 SAUTER 436.216

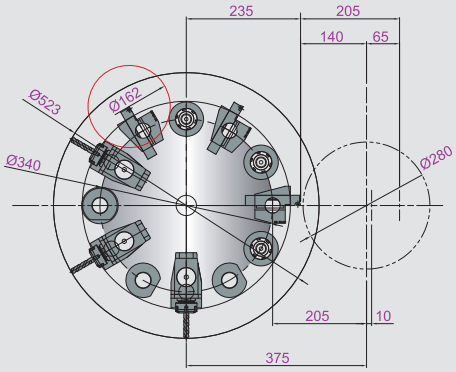

BMT 55 BARUFFALDI TBMR 200

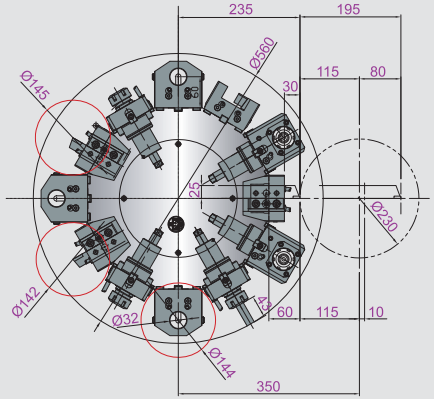

TOOL TRAVEL

Unit：mm

VDI 30 LS160SP

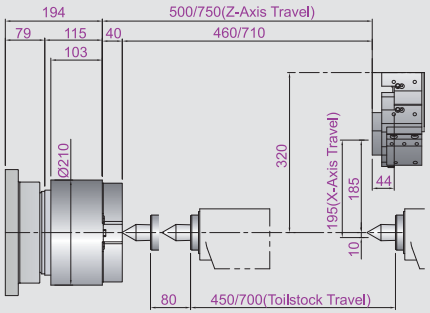

VDI 40 LS200SP

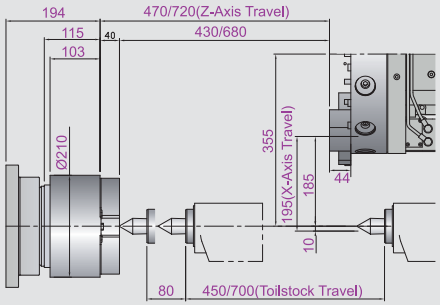

VDI 30 SAUTER 436.216

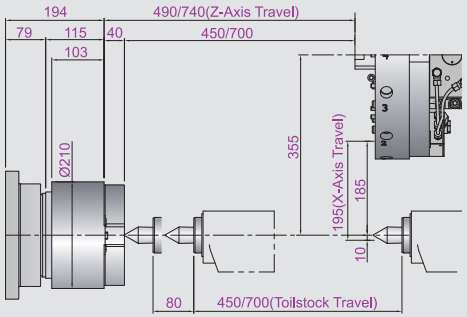

BMT 55 BARUFFALDI TBMR 200

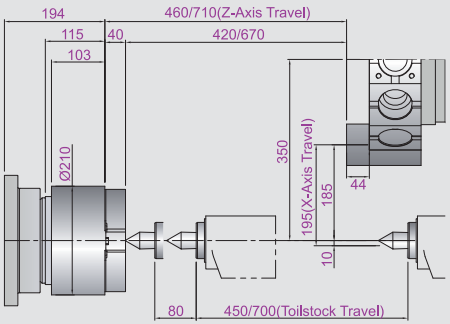

TOOLING SYSTEM

Unit : mm

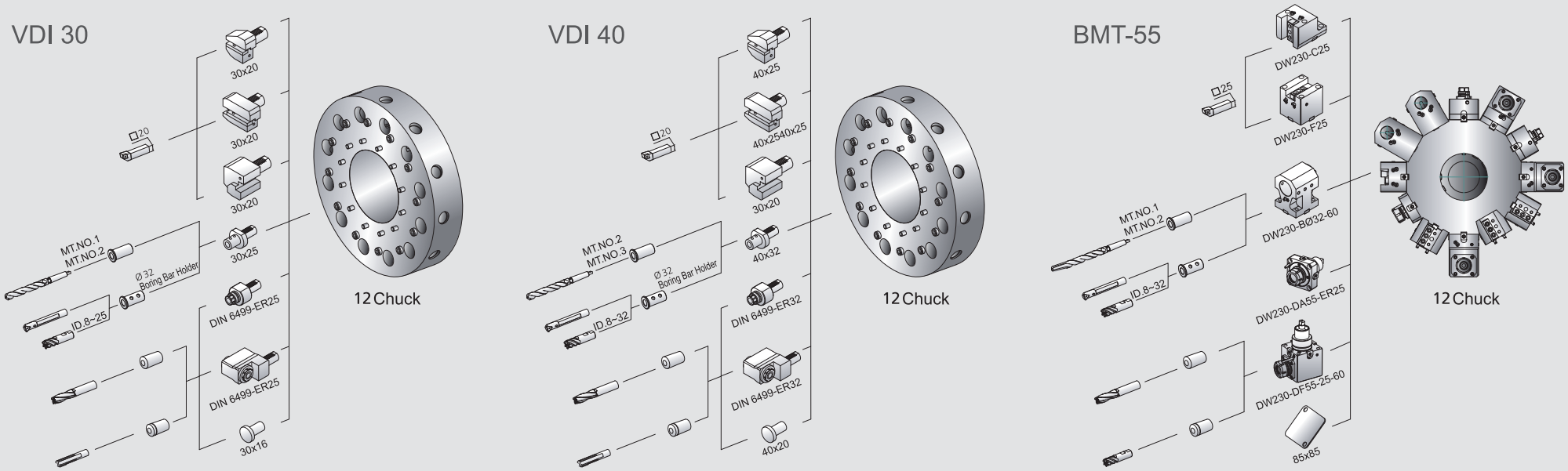

SPINDLE POWER DIAGRAM

Main Spindle Motor

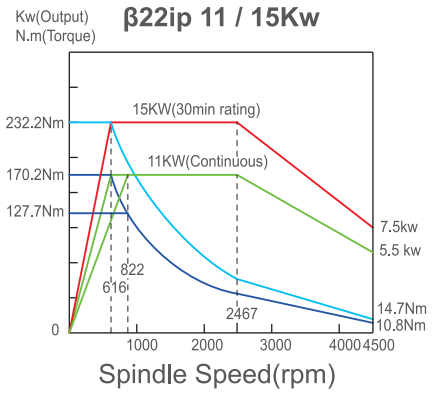

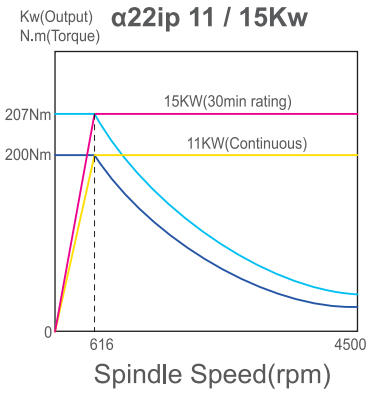

Live Tooling Motor

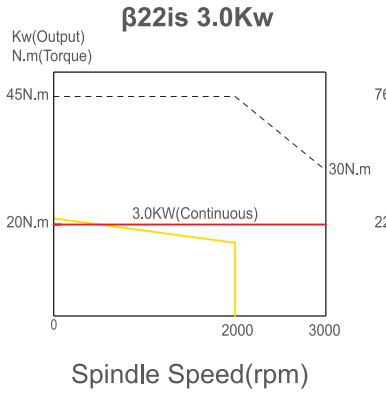

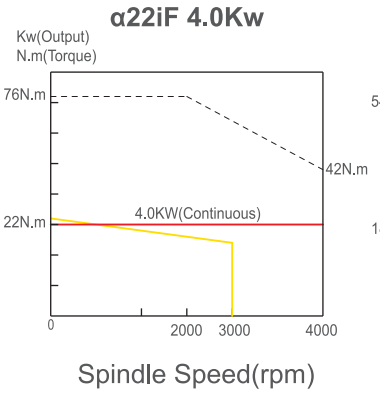

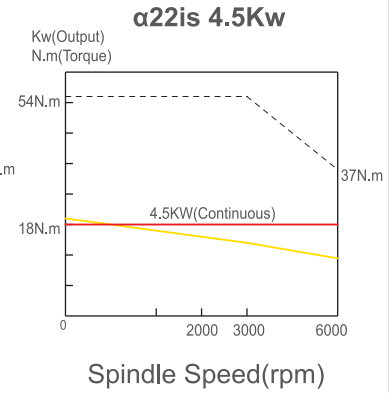

BT SERIES – Box way CNC Lathe

MAIN SPECIFICATION:

ITEM		UNIT	BT-300 / L / XL	BT-380 / L / XL
Max. Swing Over Bed		mm	600	
Max. Turning Diameter		mm	410	
Max. Turning Length		mm	500 / 750 / 1000	490 / 740 / 1000
Chuck Size		inch	8" / 10"(Opt.)	10 / 12"(Opt.)
Bar Through Diameter		mm	52	76
Z/X Axis Rapid Traverse		M/min	20 / 20	24 / 20
Turning Tool Size		mm	□25	□25
Boring Tool Size		mm	Ø40	Ø40 / Ø50(Opt.)
Turret	Type		Hydraulic / Servo(Opt.)	
	No. of Tools		10 / 12(Opt.)	

Outstanding Feature :

- The one-piece constructed 30° structure design offer low gravity, big swing as well as efficient chip disposal.
- Finite Element Methods (FEM)analyze design, increasing rigidity (compared to conventional design).
- Advanced circular rib design, absorbing impact and minimum cutting vibration to reach superior cutting surface and extend tool life.

Applicable industries:

TOOLING INTERFERENCE DIAGRAM

10 Tools Turret

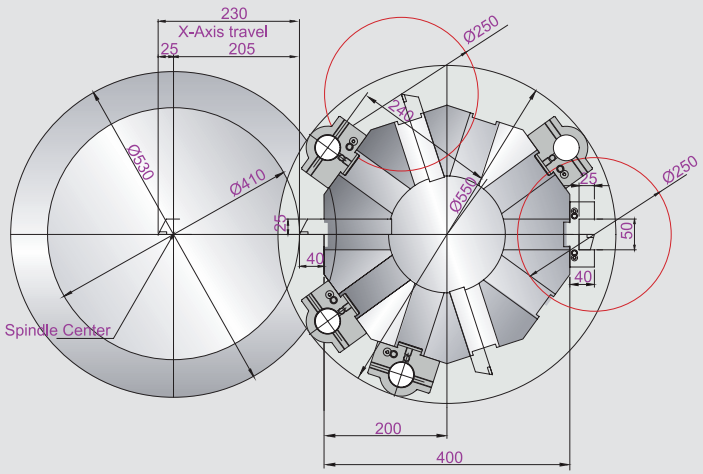

12 Tools Turret

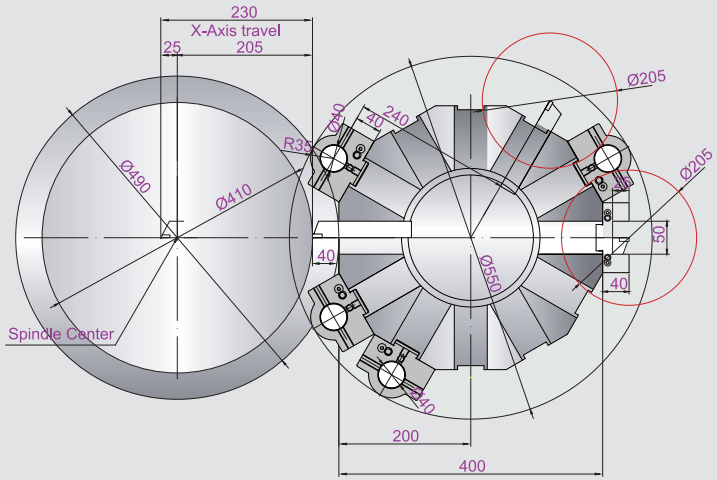

TOOL TRAVEL

8" / 10" Chuck

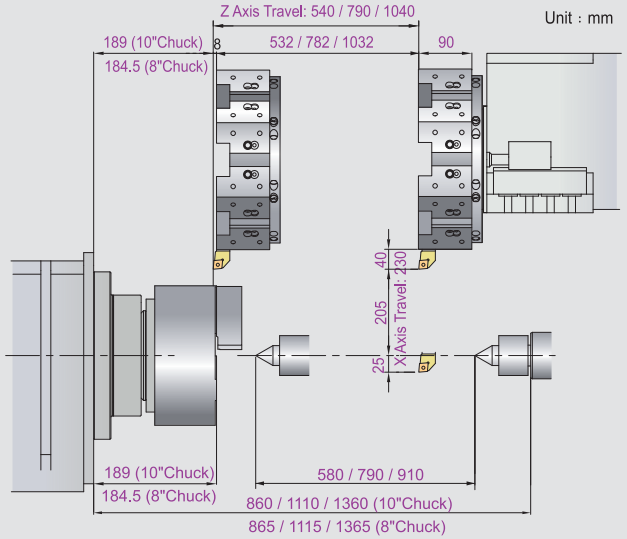

12" Chuck

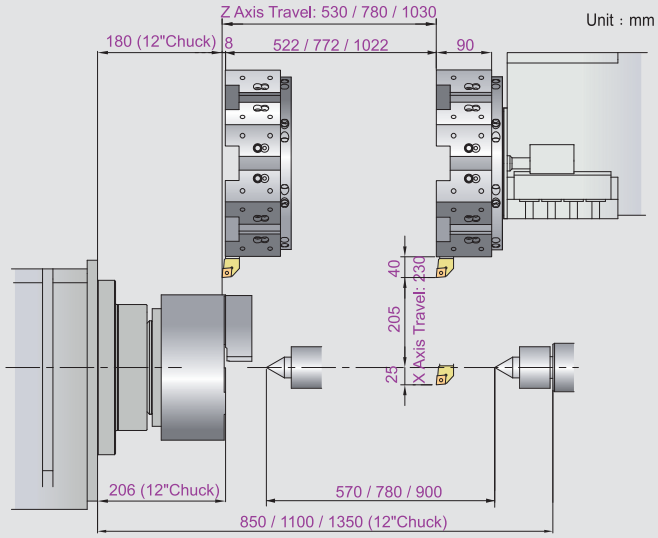

TOOLING SYSTEM

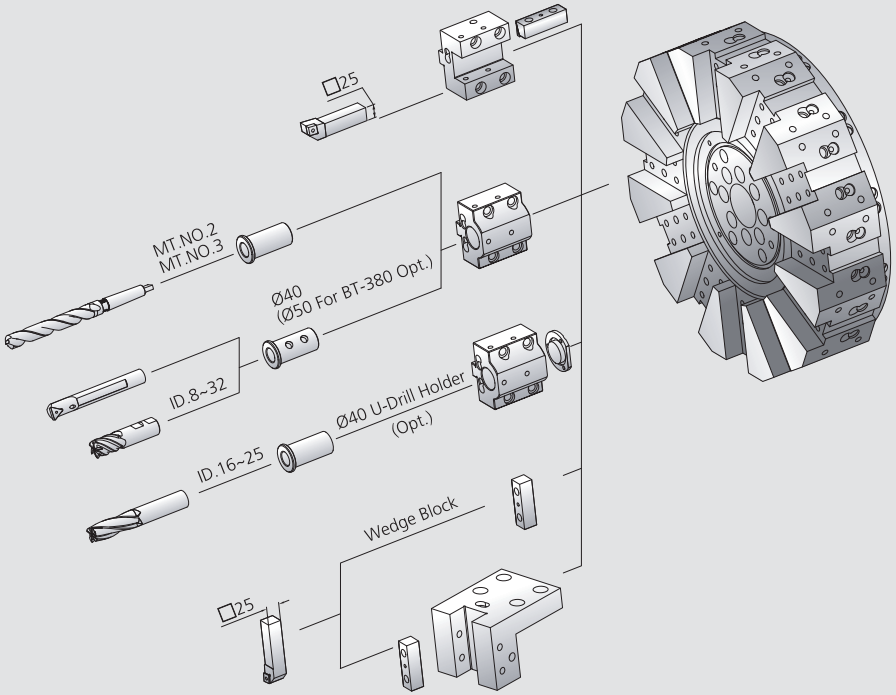

SPINDLE POWER DIAGRAM

BT-300
β22iP 11 / 15Kw

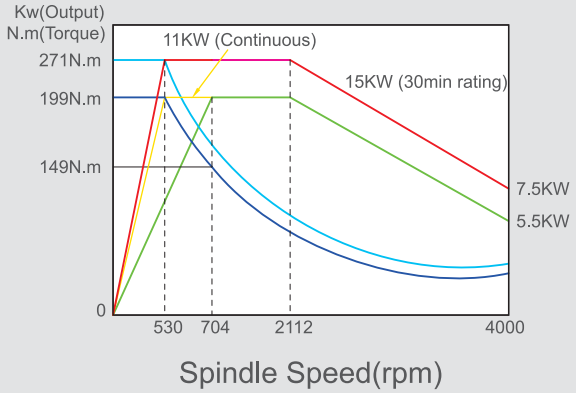

BT-300
α22ip 11 / 15Kw

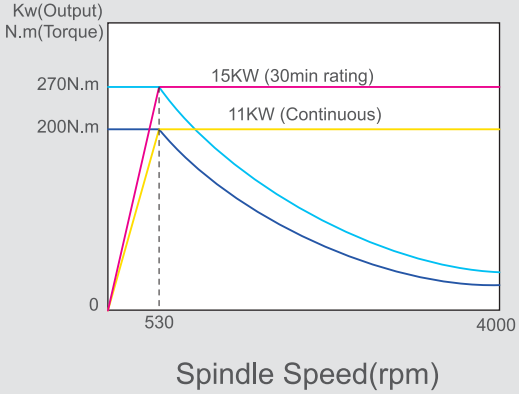

BT-380
β30iP 15 / 18.5Kw

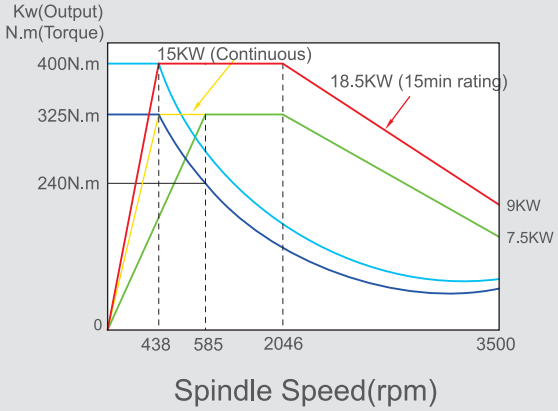

BT-380
α30ip 15 / 18.5Kw

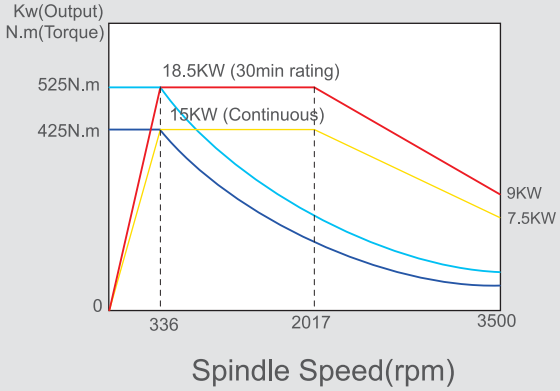

MT-300/380 SERIES – Box way Turning Center

MAIN SPECIFICATION:

ITEM		UNIT	MT-300 / L / XL	MT-380 / L / XL
Max. Swing Over Bed		mm	600	
Max. Turning Diameter		mm	310	
Max. Turning Length		mm	480 / 730 / 980	
Chuck Size		inch	8" / 10"(Opt.)	10" / 12"(Opt.)
Bar Through Diameter		mm	65	76
Z/X Axis Rapid Traverse		M/min	20 / 24	
Turning Tool Size		mm	□25	
Boring Tool Size		mm	Ø40	
Power Turret	System		VDI 40 / BMT 65(Opt.)	
	No. of Tools		12	

Main features:

- The one-piece constructed 30° structure design offer low gravity, big swing as well as efficient chip disposal.
- Finite Element Methods (FEM)analyze design, increasing rigidity (compared to conventional design).
- Advanced circular rib design, absorbing impact and minimum cutting vibration to reach superior cutting surface and extend tool life.
- Real-time driving. Disc and power tooling are controlled by individual motors.
- One-piece constructed 30° Box way structure design.

Applicable industries:

MT SERIES - MAIN CONSTRUCTION

Spindle Mechanism

- Fin type headstock.
  Excellent heat dispersion.
  Minimum thermal deformation.
- NN type spindle bearings.
  High precision bearings in wide-span design.
- Multiple Lobyrinth design for coolant proof.

Saddle with Box Slide Way

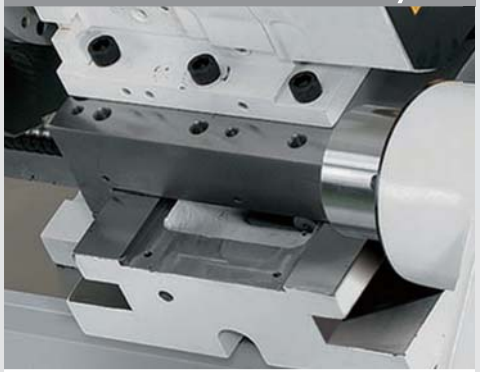

- Hardened and precision ground box way directly cast on saddle provide turret with high rigidity and stability for heavy duty.

Workpiece show

Axial Type Power Turret

- SAUTER brand from Germany.
- 12 station turret with Cs axis, combined computer program for tooling function and servo driven, powered tools for milling, boring, drilling and tapping.

Cs axis system

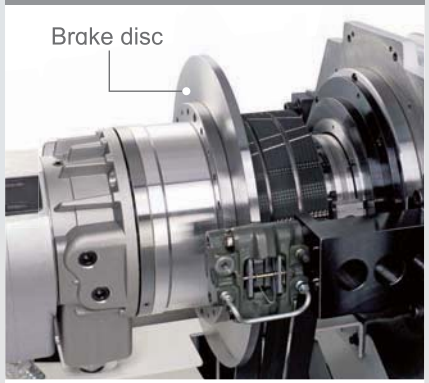

- Adopt high accurate encoder sensor and hydraulic disc brake system to reach high precisely positioning.

TOOLING INTERFERENCE DIAGRAM

12 Tools Power Turret-Radial Type

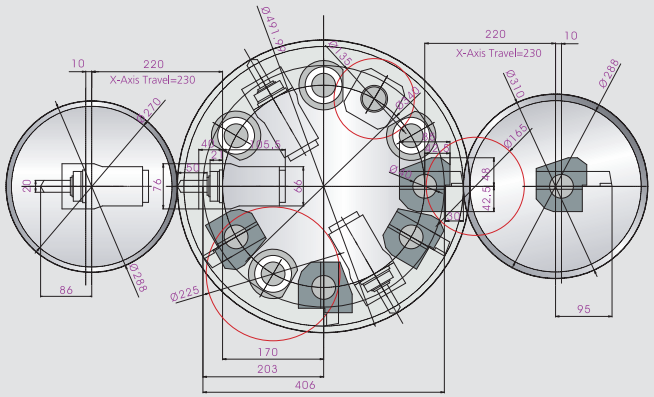

TOOL TRAVEL

Unit : mm

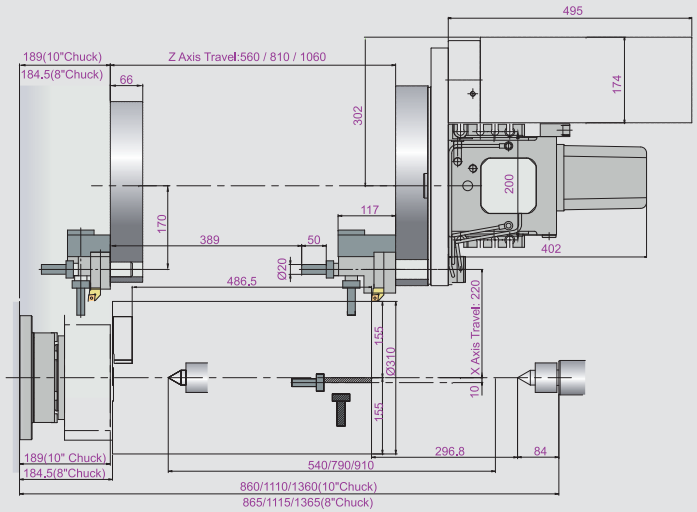

TOOLING SYSTEM

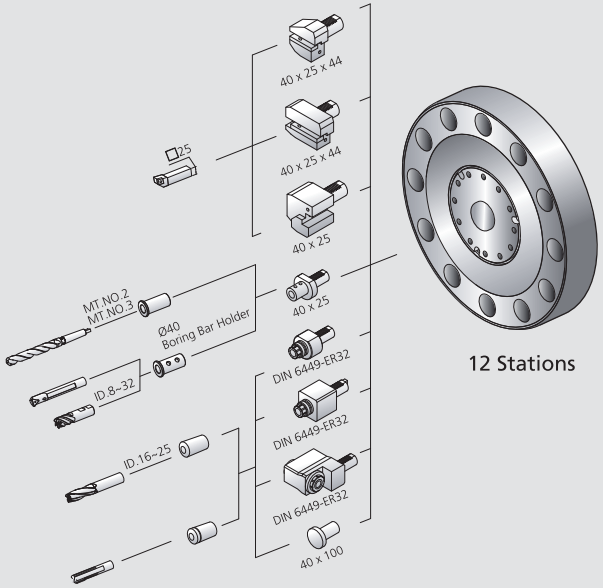

SPINDLE POWER DIAGRAM

Main Spindle Motor

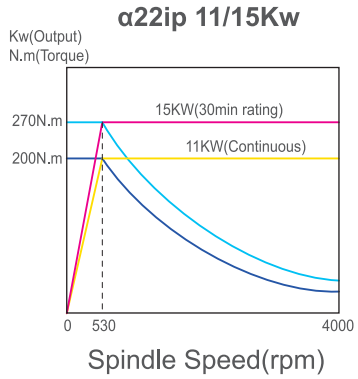

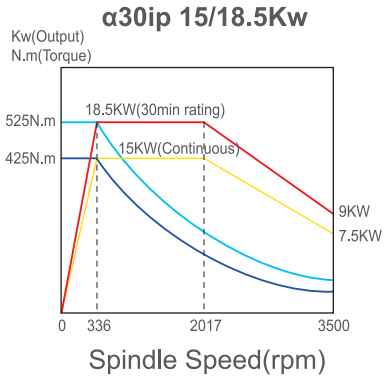

Live Tooling Motor

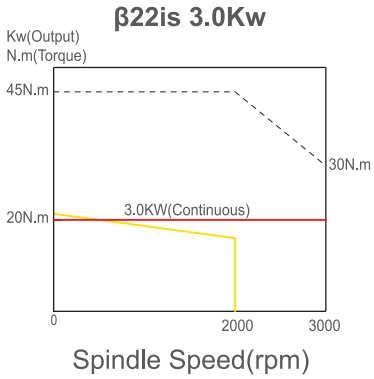

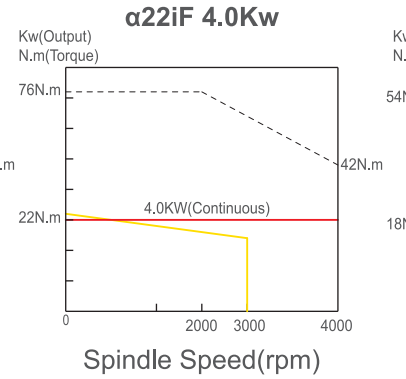

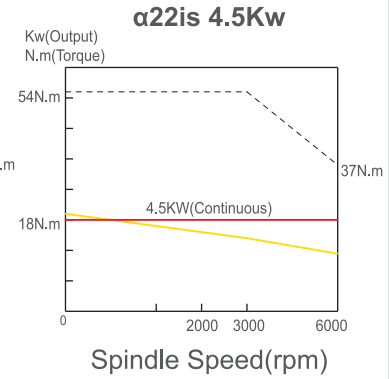

MTY SERIES – Box way Y axis Turning Center

MAIN SPECIFICATION:

ITEM		UNIT	MTY-300L / XL	MTY-380L / XL
Max. Swing Over Bed		mm	600	
Max. Turning Diameter		mm	300	
Max. Turning Length		mm	730 / 980	
Chuck Size		inch	8" / 10"(Opt.)	10" / 12"(Opt.)
Bar Material Thru Diameter		mm	52 / 65(Opt.)	76
Y Axis Travel		mm	100 (±50)	
Z/X/Y Axis Rapid Traverse		M/mm	24 / 20 / 10	
Turning Tool Size		mm	□25	
Boring Tool Size		mm	Ø40	
Power Turret	System		VDI 40 / BMT65(Opt.)	
	No. of Tools		12	

Outstanding features:

- Excellent & Optimum design with rigid turning and accuracy.
- One-piece constructed 30° Box way structure design for low gravity and efficient chip disposal.
- Adopt two motors, one for disc and one for power tooling to achieve on time driving.
- Provide Off-Center turning for milling function.

Applicable industries:

MTY SERIES - MAIN CONSTRUCTION

Y Axis 30° + 30° Slant Bed

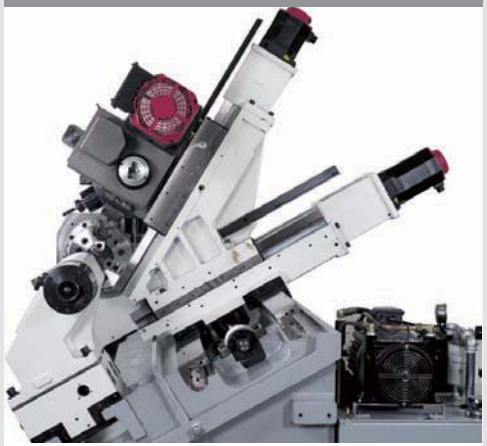

- Fictitious Y axis design composed of X1 & X2.
- Complex processing purpose, a wide variety of parts may be efficiently machined.
- Enhances multi-tasking live tooling capabilities and improves various machining precision.
- High precision grooving and X-axis off-center drilling are enabled.

Cs axis system

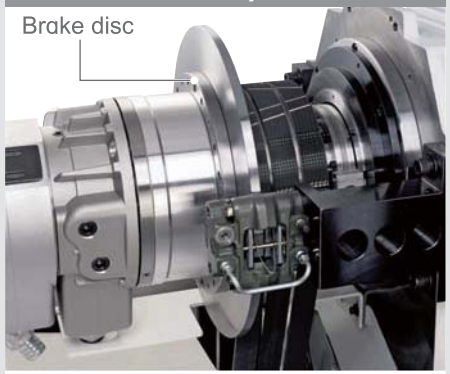

- Adopt high accurate encoder sensor and hydraulic disc brake system to reach high precisely positioning.
- Positioning accuracy 15 second.
- Repeat positionong accuracy 5 second.

Workpiece show

Radial Type Power Turret

VDI 40

BMT 65

- BARUFFALDI brand from Italy.
- 12 station turret with Cs axis, combined computer program for tooling function and servo driven, powered tools for milling, boring, drilling and tapping.
- Adopt two motors for on time driving.

TOOLING INTERFERENCE DIAGRAM:

BARUFFALDI TBMR-200 / VDI 40
12 Tools Power Turret-Radial Type

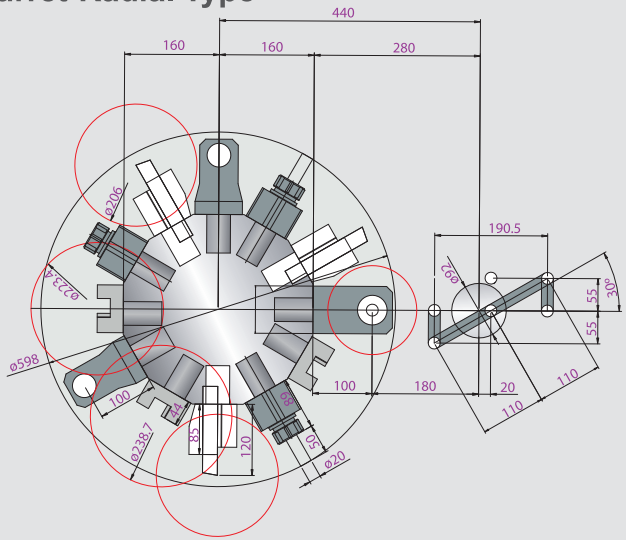

BARUFFALDI TBMR-200 / BMT 65
12 Tools Power Turret-Radial Type

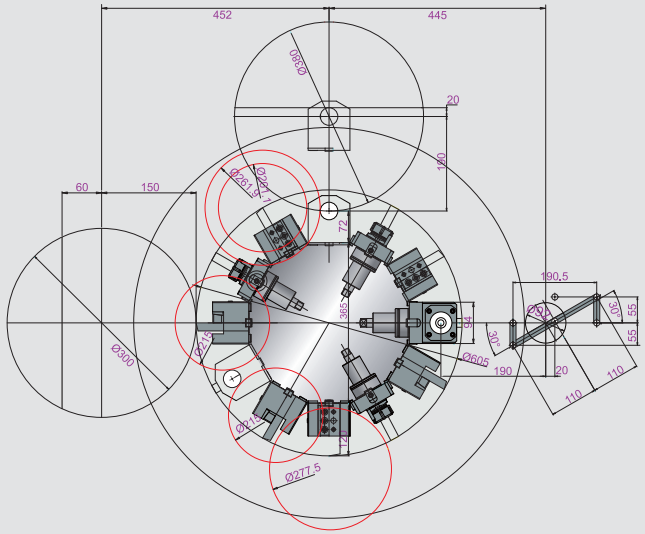

TOOL TRAVEL

BARUFFALDI TBMR-200 / VDI 40

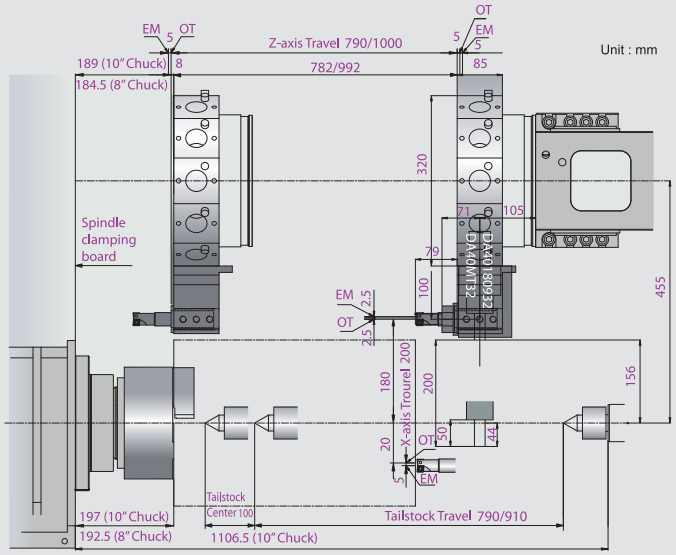

BARUFFALDI TBMR-200 / BMT 65

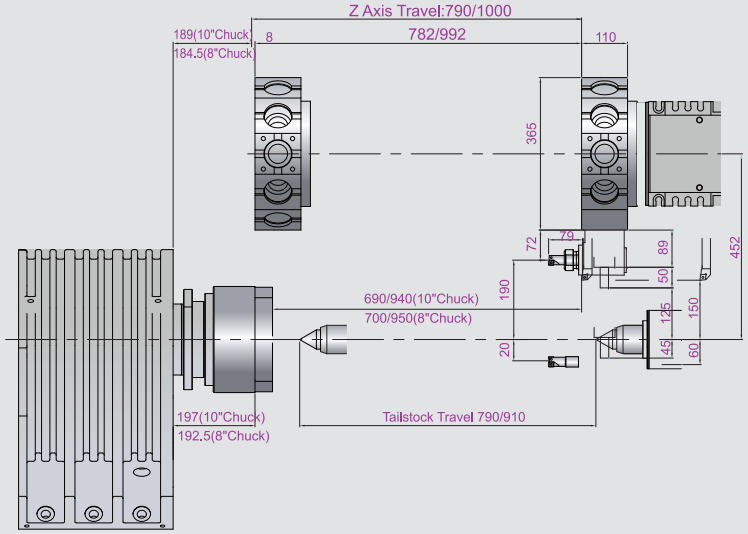

TOOLING SYSTEM

VDI 40

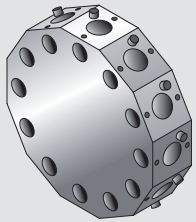

12 Stations

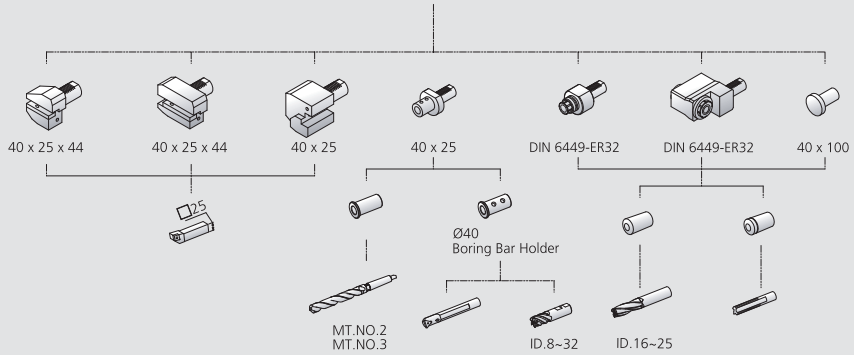

BMT 65

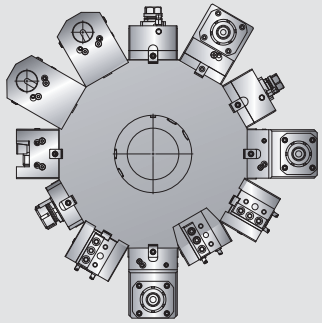

12 Stations

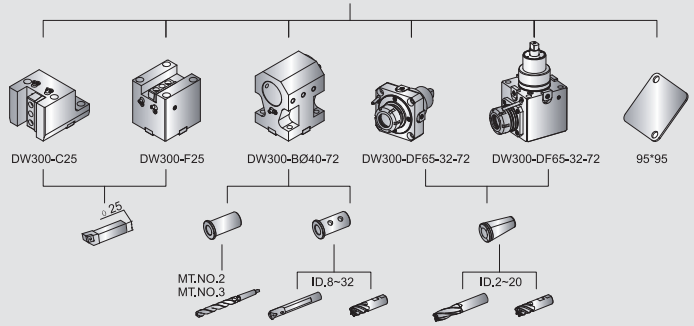

SPINDLE POWER DIAGRAM

Main Spindle Motor

α22ip 11/15Kw

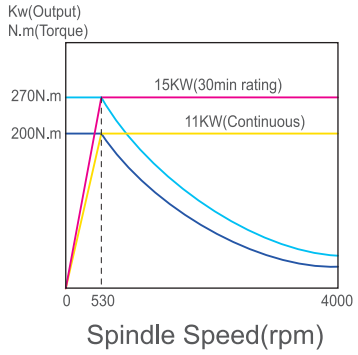

α30ip 15/18.5Kw

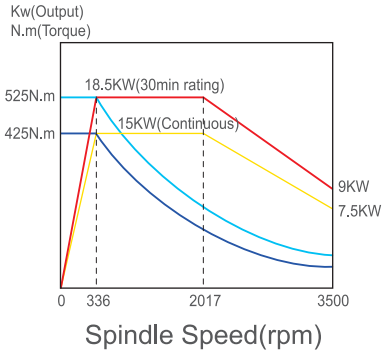

Live Tooling Motor

α22iF 4.0Kw

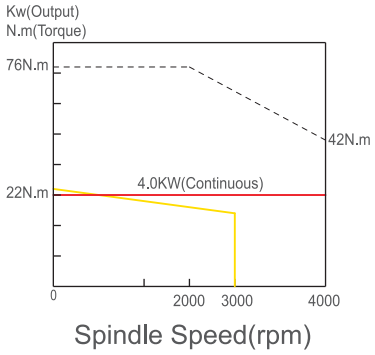

α22is 4.5Kw

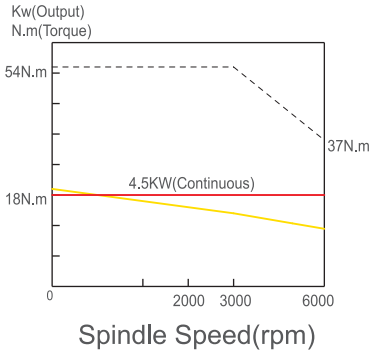

MTS MSY SERIES

– Twin Spindle Turning Center
– Twin Spindle Turning Center with Y axis

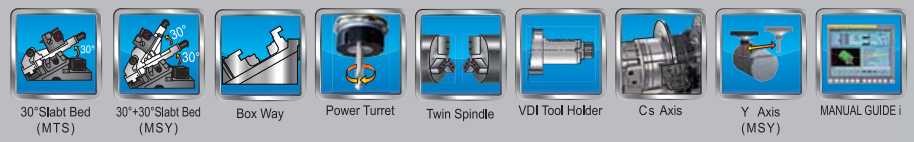

MAIN SPECIFICATION:

ITEM	UNIT	MTS-300 L/XL	MSY-300 L/XL	MTS-380 L/XL	MSY-380 L/XL
Max. Swing Over Bed	mm	600	600	600	600
Max. Turning Diameter	mm	360	300	360	300
Max. Turning Length	mm	650/(610) / 900/860	650/(610) / 600/(560)	610/(590) / 860/(840)	560/(540) / 810/(790)
Main Spindle Nose	ASA	A2-6	A2-6	A2-8	A2-8
Main Chuck Size	inch	8”/10”(opt.)	8”/10”(opt.)	10”/12”(opt.)	10”/12”(opt.)
Main Spindle Bore Hole	mm	76	76	86	86
Main Spindle Speed	rpm	4000/3500(opt.)	4000/3500(opt.)	3500/3200(opt.)	4000/3500(opt.)
Sub Spindle Nose	ASA	A2-5	A2-5	A2-5	A2-5
Sub Chuck Size	inch	6”	6”	6”	6”
Sub Spindle Bore Hole	mm	45	45	45	45
Sub Spindle Speed	rpm	4500	4500	4500	4500
Axial Traverse (Z/X/B)	mm	700/220/600(L) 950/220/850(XL)	700/200/600(LY) 950/200/850(XLY)	685/220/570(L) 935/220/820(XL)	660/200/570(LY) 910/200/820(XLY)
Axial Traverse (Y)	mm	-	100(±50)	-	100(±50)
Rapid Traverse (Z/X/B/Y)	mm	24/20/12	24/20/12/10	24/20/12	24/20/12/10
Power Turret System	-	Servo Driven ; VDI 40 / BMT 65(opt.)			

Outstanding Features :

- One-piece constructed 30 box-way structure.
  An integration of rigidity and efficiency.
- Servo-driven power turret.
  Live tooling with Cs function, rigid, powerful, and fast.
- Sub spindle
  6” chuck with powerful motor. Automatically transfer workpiece from main spindle to sub spindle.
- Multi-task
  Highly efficient on milling, boring, drilling, and tapping from both ends of workpiece.

Applicable industries:

航太產業 汽車工業 機踏車產業 住宅設備產業 建設機械產業

MTS / MSY SERIES - MAIN CONSTRUCTION

Y axis System

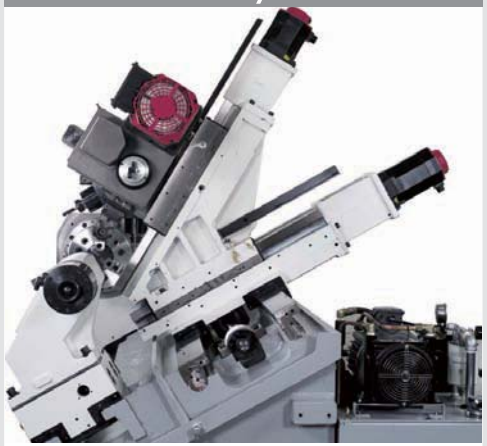

- Fictitious Y axis design composed of X1 & X2.
- Complex processing purpose, a wide variety of parts may be efficiently machined.
- Enhances multi-tasking live tooling capabilities and improves various machining precision.
- High precision grooving and X-axis off-center drilling are enabled.

Cs axis system

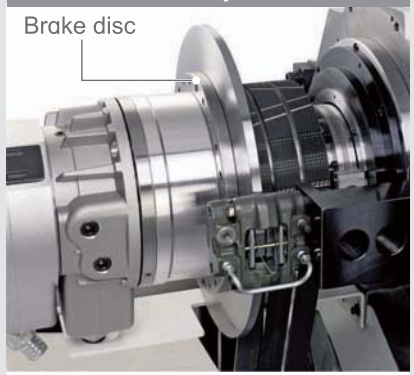

- Adopt high accurate encoder sensor and hydraulic disc brake system to reach high precisely positioning.
- Positioning accuracy 15 second.
- Repeat positionong accuracy 5 second.

Servo-Driven Power Turret

VDI 40

BMT 65

- 12 station turret with Cs axis, combined computer program for tooling function and servo driven, powered tools for milling, boring, drilling and tapping.
- Adopt two motors for on time driving.

Sub Spindle

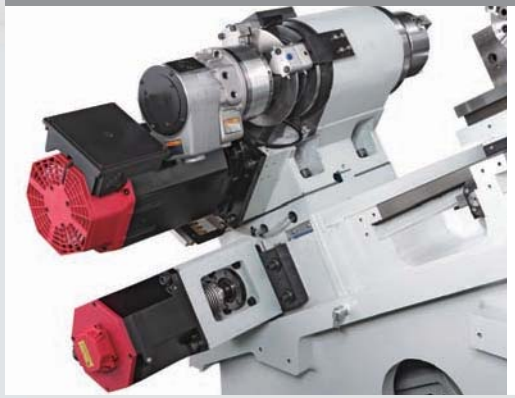

- 6”-chuck size sub spindle with powerful motor.
- Workpiece transfers automatically from main spindle to sub spindle. Improving accuracy and cycle time.

WORK PROGRAMME

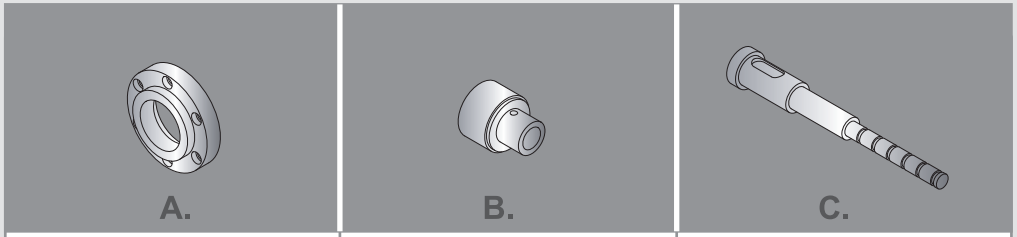

A1.

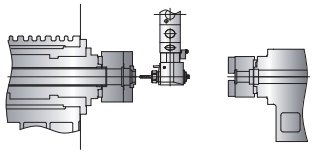

B1.

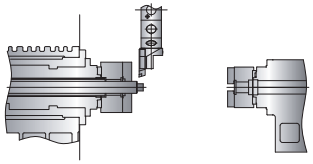

C1.

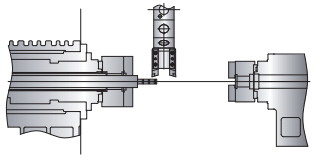

A2.

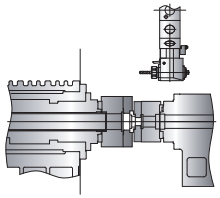

B2.

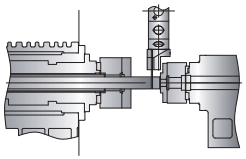

C2.

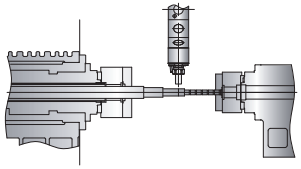

A3.

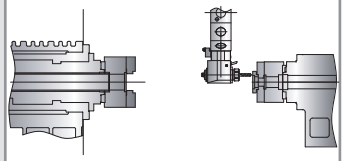

B3.

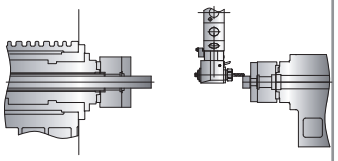

C3.

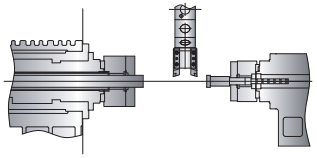

TOOL TRAVEL

UNIT : mm

Power Turret

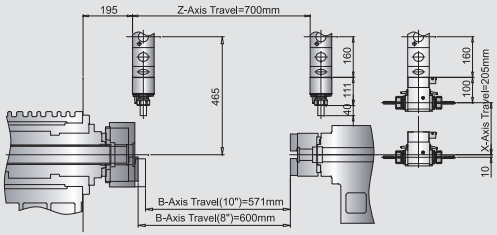

I.D. / O.D. Tool Holder

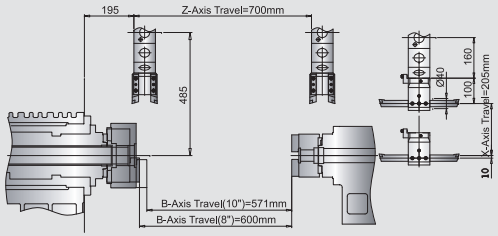

Turning Tool Holder

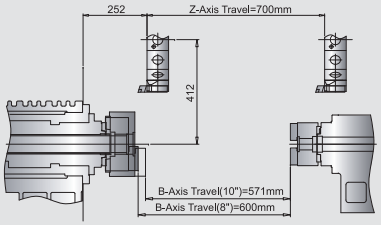

I.D. / O.D. Tool Holder

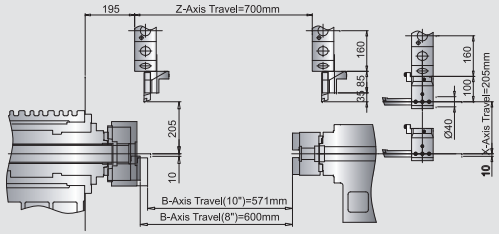

Turning Tool Holder (Sub. Spindle)

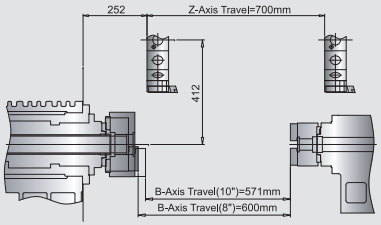

I.D. / O.D. Tool Holder

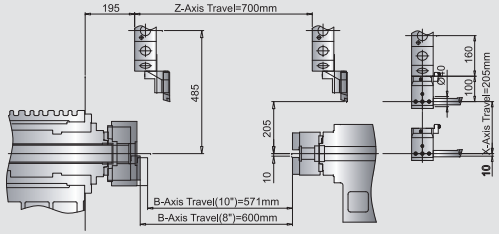

TOOLING SYSTEM

VDI 40

Unit : mm

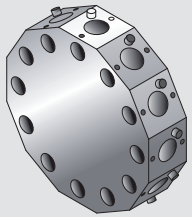

12 Stations

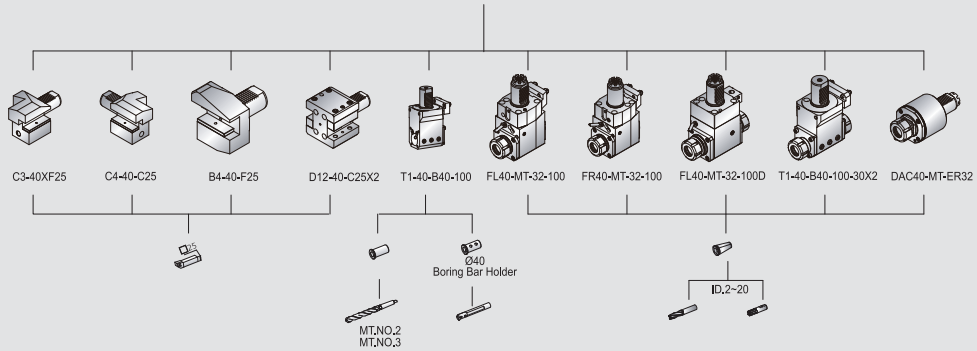

BMT 65

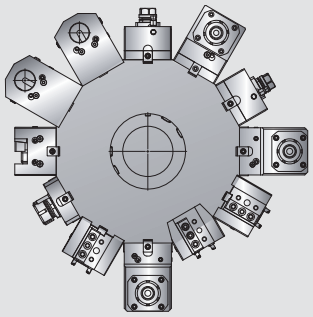

12 Stations

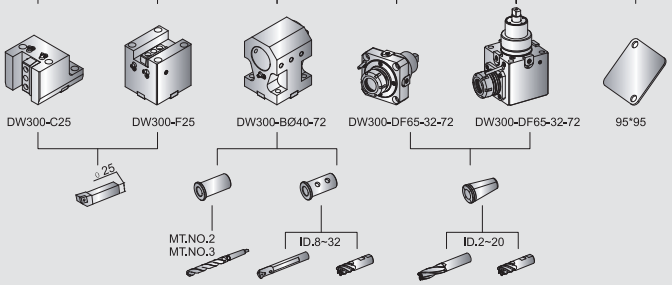

SPINDLE POWER DIAGRAM

Main Spindle Motor

α22ip 11/15Kw

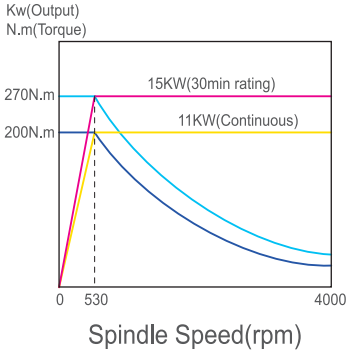

α30ip 15/18.5Kw

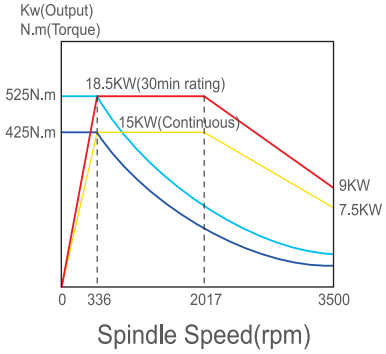

Sub. Spindle Motor

α6i 5.5/7.5Kw

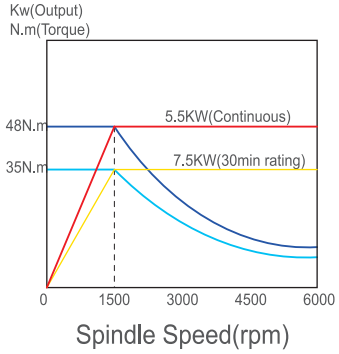

Live Tooling Motor

α22iF 4.0Kw

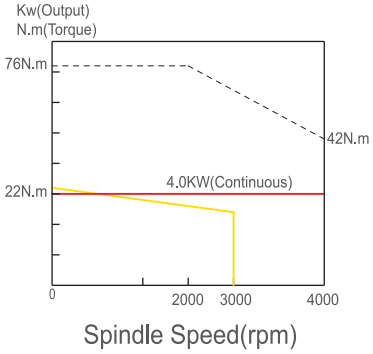

α22is 4.5Kw

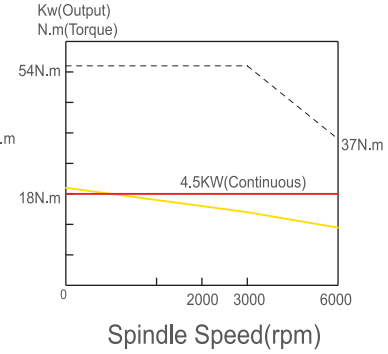

ACCESSORIES

OPTIONAL ACCESSORIES:

Manual Type Tool Setter

Auto Type Tool Setter

- Setting tool offsets.
- In-process tool inspection.

Bar Feeder System

Part Catcher (Chip Conveyor Type)

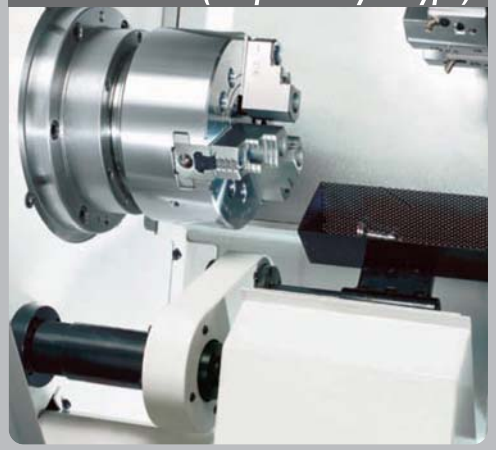

MT4 Built-in Type Tailstock

- The built-in type tailstock provides maximum rigidity and load capacity.
- Provide excellent run-out value.

Collet Chuck／Oil Mist Collector

Oil Skimmer

Gantry loading & unloading

ACCESSORIES

STANDARD AND OPTIONAL ACCESSORIES:

ITEM	RT series	BT series	MT series	MTY series	MTS series	MSY series
SPINDLE						
Rigid Tapping	S	S	S	S	S	S
Spindle+Cs Axis+Disk Braking	X	X	S	S	S	S
One Set Hard / Soft Jaw	S	S	S	S	S	S
Collet Chuck System	O	O	O	O	O	O
TURRET						
10 Station Hydraulic Turret	S	S	X	X	X	X
10 Station Servo Turret	O	O	X	X	X	X
12 Station Hydraulic Turret	O	O	X	X	X	X
12 Station Servo Turret	O	O	X	X	X	X
12 Station VDI Hydraulic Turret	O	O	X	X	X	X
12 Station VDI Servo Turret	O	O	X	X	X	X
12 Station VDI Power Turret-Axial	X	X	S	O	X	X
12 Station Power Turret-Radial	X	X	O	S	S	S
12 Station BMT Power Turret-Axial	X	X	O	O	O	O
Tool Holder & Sleeve	S	S	O	O	O	O
Power Tool Holder	X	X	O	O	O	O
VDI Tool Holder	O	O	O	O	O	O
COOLANT						
High Pressure Pump	S	S	S	S	S	S
Oil Mist Collector	O	O	O	O	O	O
Oil Skimmer	O	O	O	O	O	O
Coolant Gun	O	O	O	O	O	O
Coolant Flush System For Inside Cover	O	O	O	O	O	O
Coolant On Spindle Side	S	S	S	S	S	S

ITEM	RT series	BT series	MT series	MTY series	MTS series	MSY series
TAILSTOCK						
Hydraulic Tailstock (Saddle Type)	S	S	S	S	X	X
Programmable Tailstock (Saddle Type)	O	O	O	O	X	X
MT4 Built-In Tailstock	X	O	O	O	X	X
SAFETY SYSTEM						
Door Interlock	O	O	O	O	O	O
Twin-Layer Safety Window	S	S	S	S	S	S
Hydraulic Detect Switch	S	S	S	S	S	S
CE System	O	O	O	O	O	O
PART CLAMPING SYSTEM						
Bar Stopper	O	O	O	O	O	O
Chuck Foot Pad	S	S	S	S	S	S
Tailstock Foot Pad	O	O	O	O	X	X
Hydraulic Steady Rest	O	O	O	O	O	O
Manual Steady Rest	O	O	O	O	O	O
ACCESSORIES						
Auto Tool Setter (Renishaw)	O	O	O	O	O	O
Manual Tool Setter	O	O	O	O	O	O
Part Catcher	O	O	O	O	O	O
Part Catcher (Conveyor Type)	O	O	O	O	O	O
Auto Bar Feeder / Interface	O	O	O	O	O	O
Auto Door	O	O	O	O	O	O
Spindle Air Blow	O	O	O	O	O	O
Transformer	O	O	O	O	O	O
Chip Convetor	S	S	S	S	S	S
Tool Box	S	S	S	S	S	S
3-Color Alarm Light	S	S	S	S	S	S
Auto Lubrication	S	S	S	S	S	S
Live Center	S	S	S	S	X	X
切削負載監控系統	O	O	O	O	O	O

Standard: S Optional: O N/A: X

SPECIFICATION

SPECIFICATION

ITEM		RT-280P	RT-280PL	BT-300	BT-300L	BT-300XL	BT-380	BT-380L	BT-380XL	BT-420	BT-420L	BT-420XL
CAPACITY												
Max. Swing Over Bed	mm	570	570	600	600	600	600	600	600	750	750	750
Max. Swing Over Cross slide	mm	350	350	400	400	400	400	400	400	420	420	420
Max. Turning Diameter	mm	350	350	410	410	410	410	410	410	560	560	560
Max. Turning Length	mm	500	750	500	750	1000	500	750	1000	370	620	870
SPINDLE												
Spindle Nose	ASA	A 2-6	A 2-6	A 2-6	A 2-6	A 2-6	A2-8	A2-8	A2-8	A2-8	A2-8	A2-8
Chuck Size std / (opt)	inch	8"	8"	8"/ (10")	8"/ (10")	8"/ (10")	10"/ (12")	10"/ (12")	10"/ (12")	12"	12"	12"
Spindle Bore Hole std / (opt)	mm	62	62	76	76	76	86	86	86	86 / (105)	86 / (105)	86 / (105)
Spindle Speed	rpm	4500	4500	4000	4000	4000	3500	3500	3500	2500	2500	2500
Spindle Motor	KW	15	15	15	15	15	18.5	18.5	18.5	22	22	22
Bar Material Thru Diameter std / (opt)	mm	52	52	65	65	65	76	76	76	76 / (90)	76 / (90)	76 / (90)
TRAVEL												
Z Axis Travel	mm	540	790	540	790	1040	530	780	1030	410	660	910
X Axis Travel	mm	195(175+20)	195(175+20)	230(205+25)	230(205+25)	230(205+25)	230(205+25)	230(205+25)	230(205+25)	310(280+30)	310(280+30)	310(280+30)
RAPID FEED RATE												
Z Axis Rapid Traverse	M/min	30	30	24	24	24	24	24	24	18	18	18
X Axis Rapid Traverse	M/min	30	30	20	20	20	20	20	20	18	18	18
TURRET												
Number of Tools std / (opt)	unit	10 / (12)	10 / (12)	10 / (12)	10 / (12)	10 / (12)	10 / (12)	10 / (12)	10 / (12)	10 / (12)	10 / (12)	10 / (12)
Turning Tool Size	mm	□25 / □20	□25 / □20	□25	□25	□25	□25	□25	□25	□25	□25	□25
Boring Tool Size std / (opt)	mm	Ø32	Ø32	Ø40	Ø40	Ø40	Ø40 / (Ø50)	Ø40 / (Ø50)	Ø40 / (Ø50)	Ø50	Ø50	Ø50
Indexing Type std / (opt)		Hyd / (Servo)	Hyd / (Servo)	Hyd / (Servo)	Hyd / (Servo)	Hyd / (Servo)	Hyd / (Servo)	Hyd / (Servo)	Hyd / (Servo)	Hyd / (Servo)	Hyd / (Servo)	Hyd / (Servo)
Tool To Tool Change Time (Adjacent tool)	sec	0.45 / (0.3)	0.45 / (0.3)	0.45 / (0.3)	0.45 / (0.3)	0.45 / (0.3)	0.45 / (0.3)	0.45 / (0.3)	0.45 / (0.3)	0.47 / (0.41)	0.47 / (0.41)	0.47 / (0.41)
Tool To Tool Change Time (Opposite tool)	sec	1.5 / (0.9)	1.5 / (0.9)	1.5 / (0.9)	1.5 / (0.9)	1.5 / (0.9)	1.5 / (0.9)	1.5 / (0.9)	1.5 / (0.9)	1.9 / (0.9)	1.9 / (0.9)	1.9 / (0.9)
TAILSTOCK												
Tailstock Travel	mm	450	700	580	790	910	570	780	900	450	700	950
Quill Travel	mm	80	80	100	100	100	100	100	100	100	100	100
Quill Diameter	mm	70	70	85	85	85	85	85	85	85	85	85
Taper Center	MT	4	4	5	5	5	5	5	5	5	5	5
GENERAL DIMENSION												
Floor Space	mm	2600x1650	2850x1650	2750x1690	3000x1690	3550x1760	2750x1690	3000x1690	3550x1760	3000x2000	3250x2000	3500x2000
Machine Height	mm	2000	2000	1870	1870	1870	1870	1870	1870	2500	2500	2500
Net Weight	kg	4000	4500	4800	5300	5800	5000	5500	6000	6000	6500	7000

MT-300L	MT-300XL	MT-380	MT-380L	MT-380XL	MTY-300L	MTY-300XL	MTY-380L	MTY-380XL	MTS-300L	MTS-300XL	MTS-380L
600	600	600	600	600	600	600	600	600	600	600	600
400	400	400	400	400	300	300	300	300	400	400	400
310	310	310	310	310	300	300	300	300	360	360	360
730	980	480	730	980	730	980	730	980	650 / (610)	900 / (860)	610 / (590)
A2-6	A2-6	A2-8	A2-8	A2-8	A2-6	A2-6	A2-8	A2-8	A2-6	A2-6	A2-8
8"/ (10")	8"/ (10")	10"/ (12")	10"/ (12")	10"/ (12")	8"/ (10")	8"/ (10")	10"/ (12")	10"/ (12")	8"/ (10")	8"/ (10")	10"/ (12")
76	76	86	86	86	76	76	86	86	76	76	86
4000	4000	3500	3500	3500	4000	4000	3500	3500	4000 / (3500)	4000 / (3500)	3500 / (3200
15	15	18.5	18.5	18.5	15	15	18.5	18.5	15	15	18.5
65	65	76	76	76	65	65	76	76	65	65	76
									A2-5	A2-5	A2-5
									6"	6"	6"
									45	45	45
									4500	4500	4500
									7.5	7.5	7.5
									45	45	45
810	1060	560	810	1060	790	1000	790	1000	700 / (685)	950 / (935)	685 / (665)
230(220+10)	230(220+10)	230(220+10)	230(220+10)	230(220+10)	200(180+20)	200(180+20)	200(180+20)	200(180+20)	220(205+15)	220(205+15)	220(205+15)
-	-	-	-	-	100(±50)	100(±50)	100(±50)	100(±50)	-	-	
-	-	-	-	-	-	-	-	-	600 / (570)	850 / (820)	570 / (550)
24	24	24	24	24	24	24	24	24	24	24	24
20	20	20	20	20	20	20	20	20	20	20	20
-	-	-	-	-	10	10	10	10	-	-	
-	-	-	-	-	-	-	-	-	12	12	12
12	12	12	12	12	12	12	12	12	12	12	12
□25	□25	□25	□25	□25	□25	□25	□25	□25	□25	□25	□25
Ø40	Ø40	Ø40	Ø40	Ø40	Ø40	Ø40	Ø40	Ø40	Ø40	Ø40	Ø40
Servo	Servo	Servo	Servo	Servo	Servo	Servo	Servo	Servo	Servo	Servo	Servo
VDI 40	VDI 40	VDI 40	VDI 40	VDI 40	VDI 40 / (BMT 65)	VDI 40 / (BMT 65)	VDI 40 / (BMT 65)	VDI 40 / (BMT 65)	VDI 40 / (BMT 65)	VDI 40 / (BMT 65)	VDI 40 / (BMT
0.3	0.3	0.3	0.3	0.3	0.3	0.3	0.3	0.3	0.3	0.3	0.3
0.9	0.9	0.9	0.9	0.9	0.9	0.9	0.9	0.9	0.9	0.9	0.9
790	910	540	790	910	790	910	790	910			
100	100	100	100	100	100	100	100	100			
85	85	85	85	85	85	85	85	85			
5	5	5	5	5	5	5	5	5			
3000x1690	3600x1760	2750x1690	3000x1690	3550x1760	3250x1765	3550x1765	3250x1765	3550x1765	3440x1730	3700X1730	3440x1730
1900	2000	1900	1900	2000	2300	2300	2300	2300	1930	1930	1930
5500	6000	5200	5700	6200	6100	6600	6300	6800	5800	6300	5850